PRODUCT SHEET · PENDANT LIGHT



Maubec Pendant Light

Conical glass cone, six colours to choose

The Maubec Pendant Light tapers from an aluminium cap into a clear acrylic-and-glass cone, so the light travels straight down rather than spreading wide. The layered materials soften any harshness without losing the directionality — you get focused, comfortable illumination. Six colour options from gold to blue mean it fits a minimalist kitchen or a mid-century bedroom equally well. Adjustable cord to 1 m, sloped-ceiling compatible.

SPECIFICATIONS · SHARED

DIMENSIONS	D 7.4" (19 cm) x H 6.8" (17.5 cm)
WEIGHT	1.5 kg
MATERIAL	Acrylic, glass, metal (aluminium)
FINISH	Gold, black, white, blue, grey
LIGHT SOURCE	Integrated LED, 7W / 770 lm
DIMMABLE	On request
VOLTAGE	90–260V
CORD	Up to 3.2 ft (1 m), adjustable
CANOPY	D 3.9" (10 cm)
SLOPED CEILING	Compatible
INSTALLATION	Hardwired

EMITTING COLOR

WARM WHITE (3000K) | NEUTRAL WHITE (4000K) | COOL WHITE (6000K)

COLOR

BLACK | WHITE | GREY | BLUE | RED | GOLD

CONFIGURATIONS

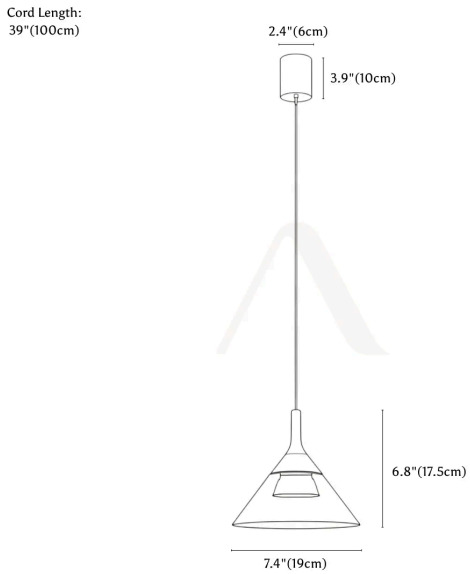

D7.4"(19CM) X H6.8"(17.5CM) / 7W
ND-MAUB-D74

ONE DRAWING PER SIZE — DIMENSION & SKU BELOW EACH

KEY FEATURES

- Conical form directs light downward — focused without harsh glare
- Layered acrylic and glass shade — smooth, comfortable diffusion
- Six finishes: gold, black, white, blue, grey, and more
- Adjustable cord to 1 m · sloped-ceiling compatible
- Integrated LED, 7W · dimmable on request

FOR SPECIFIER USE		SUBMITTAL
JOB NAME	FIXTURE TYPE	QTY
NOTES		